vision solution

Specification

SBS-SCJ208-0.322

High Resolution Double Telecentric Lens

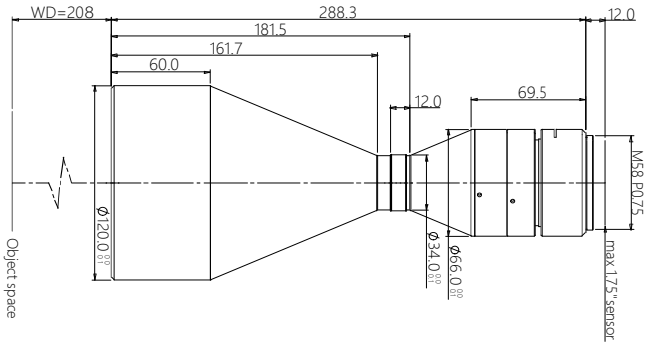

Features (SBS-SCJ series)

* Excellent double telecentric design for high resolution image result.
* Field of view is from 26mm to 300mm, suitable for most of application.
* Big Iris, low distortion, high parallel degree, big depth of view.
* Sensor size is available for 1/2.5″ 1/2″ 1/1.8″ 2/3″ 1″ 4/3″ 1.75″ 2″Φ39 35mm full.

Parameters

FOV (Dia.mm)	90
Mag.(x)	0.322
WD (mm)	208±3
Sensor size (Dia.mm)	29(1.75")
Image F#	8.5
Image MTF30(pl/mm)	>100
Object DOF (mm)	±6.1@F16
Object distortion (%)	<0.1
Object telecentric degree	<0.1
Object I/O(mm)	508±3

Mechanical

Mount	M42/M48/M58
Total length (mm)	288.3
N.W(KG)	2.2

Field of View (mm x mm)

1.75" CMV12000 (22.53x16.90)	70.0x52.5
1.75" PYTHON16k (18.43x18.43)	57.2x57.2
1.75" LineScan-4k (28.8mm)	89.4