vision solution

Specification

SBS-SCJ228-0.363

High Resolution Double Telecentric Lens

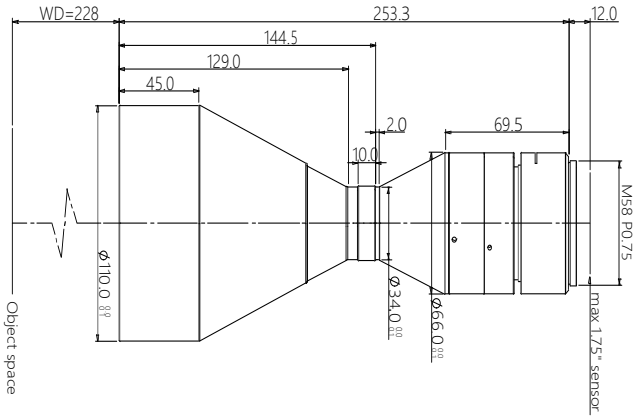

Features (SBS-SCJ series)

* Excellent double telecentric design for high resolution image result.
* Field of view is from 26mm to 300mm, suitable for most of application.
* Big Iris, low distortion, high parallel degree, big depth of view.
* Sensor size is available for 1/2.5″ 1/2″ 1/1.8″ 2/3″ 1″ 4/3″ 1.75″ 2″Φ39 35mm full.

Parameters

FOV (Dia.mm)	80
Mag.(x)	0.363
WD (mm)	228±4
Sensor size (Dia.mm)	29(1.75")
Image F#	6.8
Image MTF30(pl/mm)	>130
Object DOF (mm)	±4.9@F16
Object distortion (%)	<0.1
Object telecentric degree	<0.1
Object I/O(mm)	493±4

Mechanical

Mount	M42/M48/M58
Total length (mm)	253.3
N.W(KG)	2.4

Field of View (mm x mm)

1.75" CMV12000 (22.53x16.90)	62.1x46.6
1.75" PYTHON16k (18.43x18.43)	50.8x50.8
1.75" LineScan-4k (28.8mm)	79.3