vision solution

Specification

SBS-SCJ258-0.436

High Resolution Double Telecentric Lens

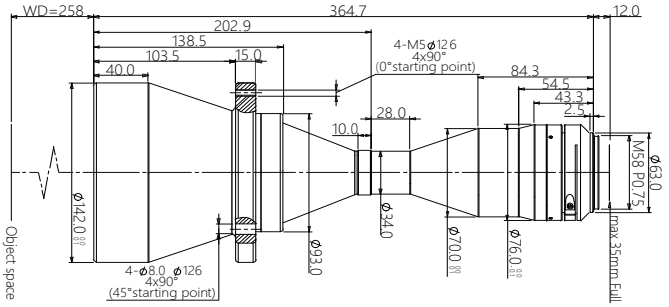

Features (SBS-SCJ series)

* Excellent double telecentric design for high resolution image result.
* Field of view is from 26mm to 300mm, suitable for most of application.
* Big Iris, low distortion, high parallel degree, big depth of view.
* Sensor size is available for 1/2.5″ 1/2″ 1/1.8″ 2/3″ 1″ 4/3″ 1.75″ 2″Φ39 35mm full.

Parameters

FOV (Dia.mm)	100
Mag.(x)	0.436
WD (mm)	258±4
Sensor size (Dia.mm)	43.6(35mm Full)
Image F#	17.1
Image MTF30(pl/mm)	>50
Object DOF (mm)	±4.2@F20
Object distortion (%)	<0.1
Object telecentric degree	<0.1
Object I/O(mm)	635±4

Mechanical

Mount	M58
Total length (mm)	364.7
N.W(KG)	3.8

Field of View (mm x mm)

CMV50000 (36.43x27.62)	83.6x63.3
KAI29050/2 (36.17x24.11)	83.0x55.3
KAI43142 (36.18x24.12)	83.0x55.3