vision solution

Specification

SBS-SCJ300-0.22

High Resolution Double Telecentric Lens

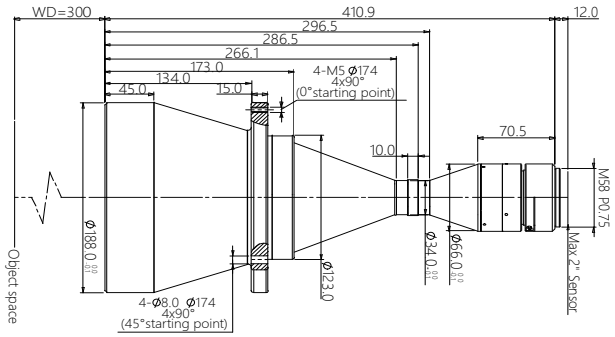

Features (SBS-SCJ series)

* Excellent double telecentric design for high resolution image result.
* Field of view is from 26mm to 300mm, suitable for most of application.
* Big Iris, low distortion, high parallel degree, big depth of view.
* Sensor size is available for 1/2.5″ 1/2″ 1/1.8″ 2/3″ 1″ 4/3″ 1.75″ 2″Φ39 35mm full.

Parameters

FOV (Dia.mm)	150
Mag.(x)	0.220
WD (mm)	300±5
Sensor size (Dia.mm)	33(2")
Image F#	11.1
Image MTF30(pl/mm)	>80
Object DOF (mm)	±16.5@F20
Object distortion (%)	<0.1
Object telecentric degree	<0.1
Object I/O(mm)	723±5

Mechanical

Mount	M42/M48/M58
Total length (mm)	410.9
N.W(KG)	6.3

Field of View (mm x mm)

2" DALSA 12M (24.58x18.43)	111.7x83.8
2" PYTHON 25K (23.04x23.04)	104.7x104.7